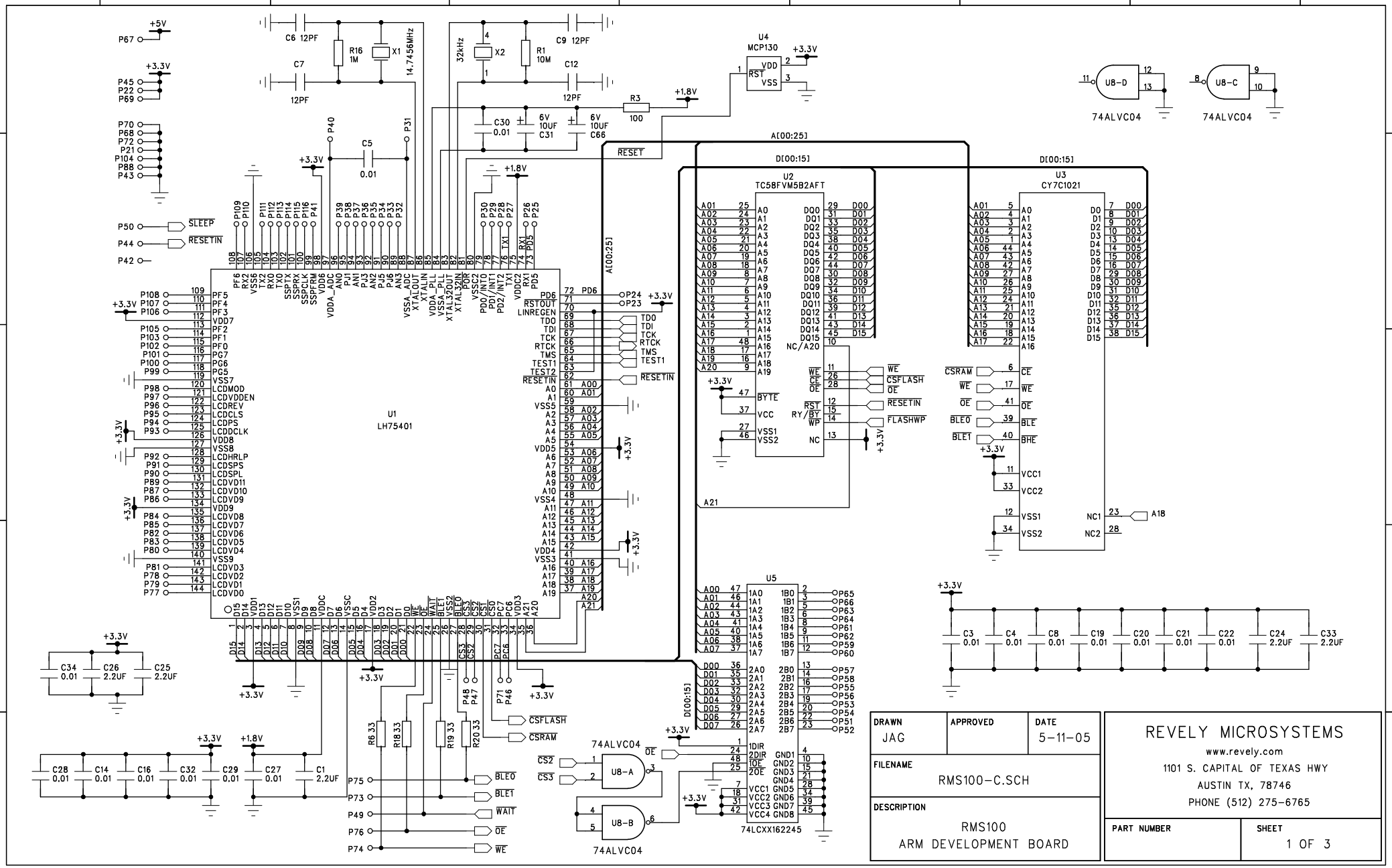
U1
LH75401
U2
TC58FVM5B2AFT
U3
CY7C1021
U4
MCP130
U5
74LCXX162245
U8-A
U8-B
U8-C
U8-D
74ALVC04
14.7456MHz
32kHz
A[00:25]
D[00:15]
RESET
SLEEP
RESETIN
CSFLASH
CSRAM
FLASHWP
BLE0
BLE1
WAIT
OE
WE
CS2
CS3
DRAWN
JAG
APPROVED
DATE
5-11-05
FILENAME
RMS100-C.SCH
DESCRIPTION
RMS100
ARM DEVELOPMENT BOARD
REVELY MICROSYSTEMS
www.revely.com
1101 S. CAPITAL OF TEXAS HWY
AUSTIN TX, 78746
PHONE (512) 275-6765
PART NUMBER
SHEET
1 OF 3
COPYRIGHT 2004-5 REVELY MICROSYSTEMS

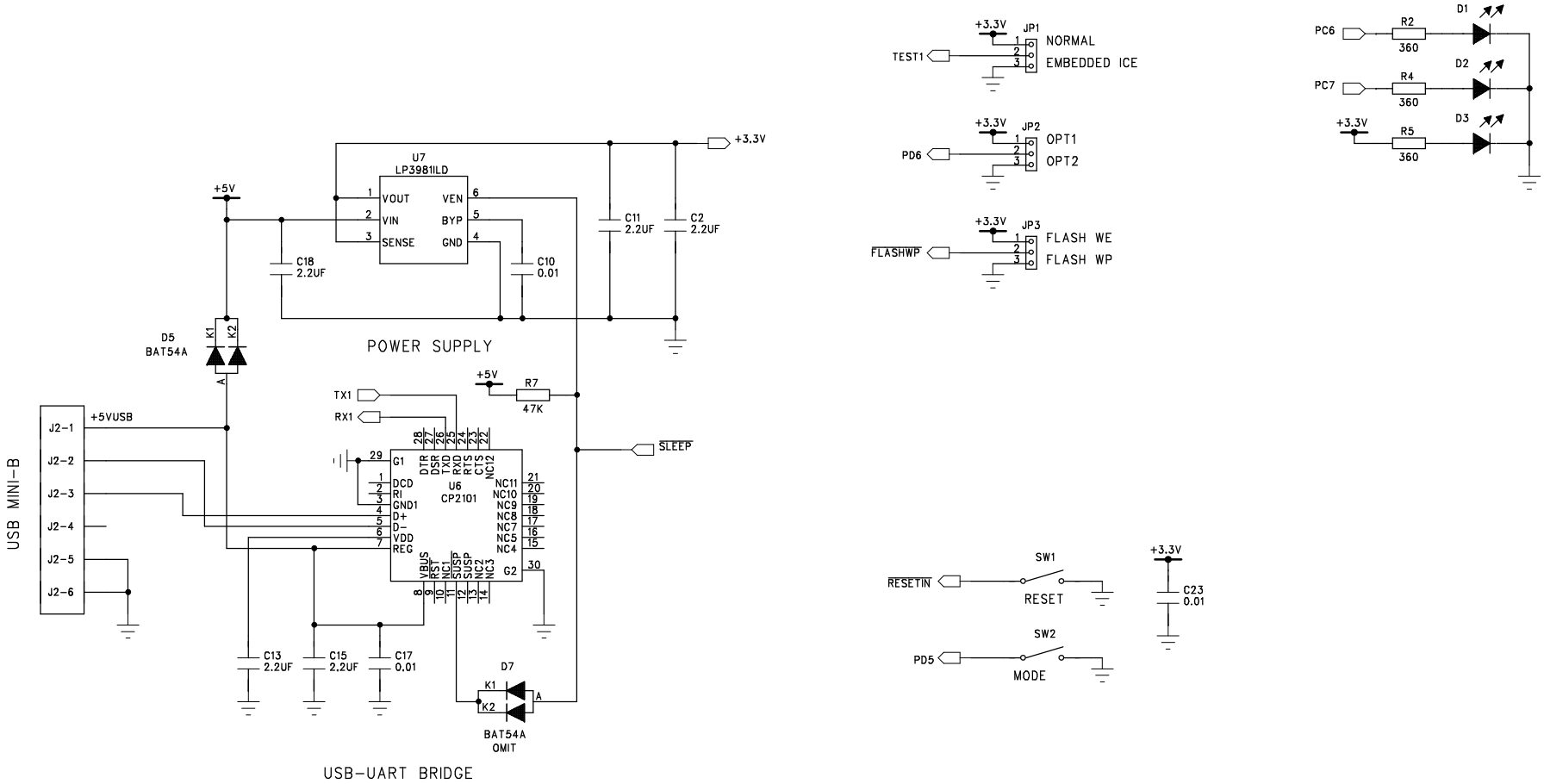

DRAWN	APPROVED	DATE
JAG		5-10-05

FILENAME: RMS100-C.sch

DESCRIPTION: RMS100 ARM DEVELOPMENT BOARD

REVELY MICROSYSTEMS
www.revely.com
1101 S. CAPITAL OF TEXAS HWY
AUSTIN TX, 78746
PHONE (512) 275-6765

PART NUMBER:

SHEET: 2 OF 3

COPYRIGHT 2004-5 REVELY MICROSYSTEMS

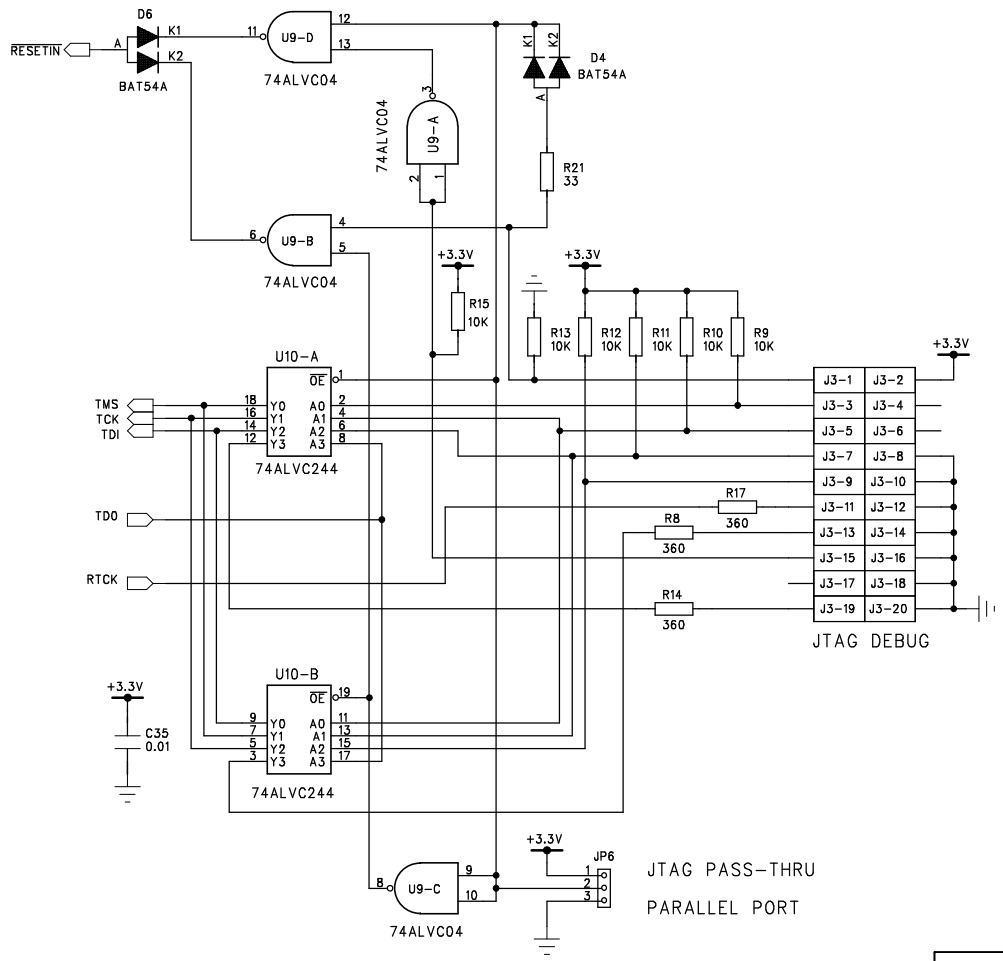

DRAWN	APPROVED	DATE
JAG		5-10-05
FILENAME	RMS100-C.sch	
DESCRIPTION	RMS100 EVB	

REVELY MICROSYSTEMS
www.revely.com
1101 S. CAPITAL OF TEXAS HWY
AUSTIN TX, 78746
PHONE (512) 275-6765

PART NUMBER	SHEET
	3 OF 3

COPYRIGHT 2004-2005 REVELY MICROSYSTEMS